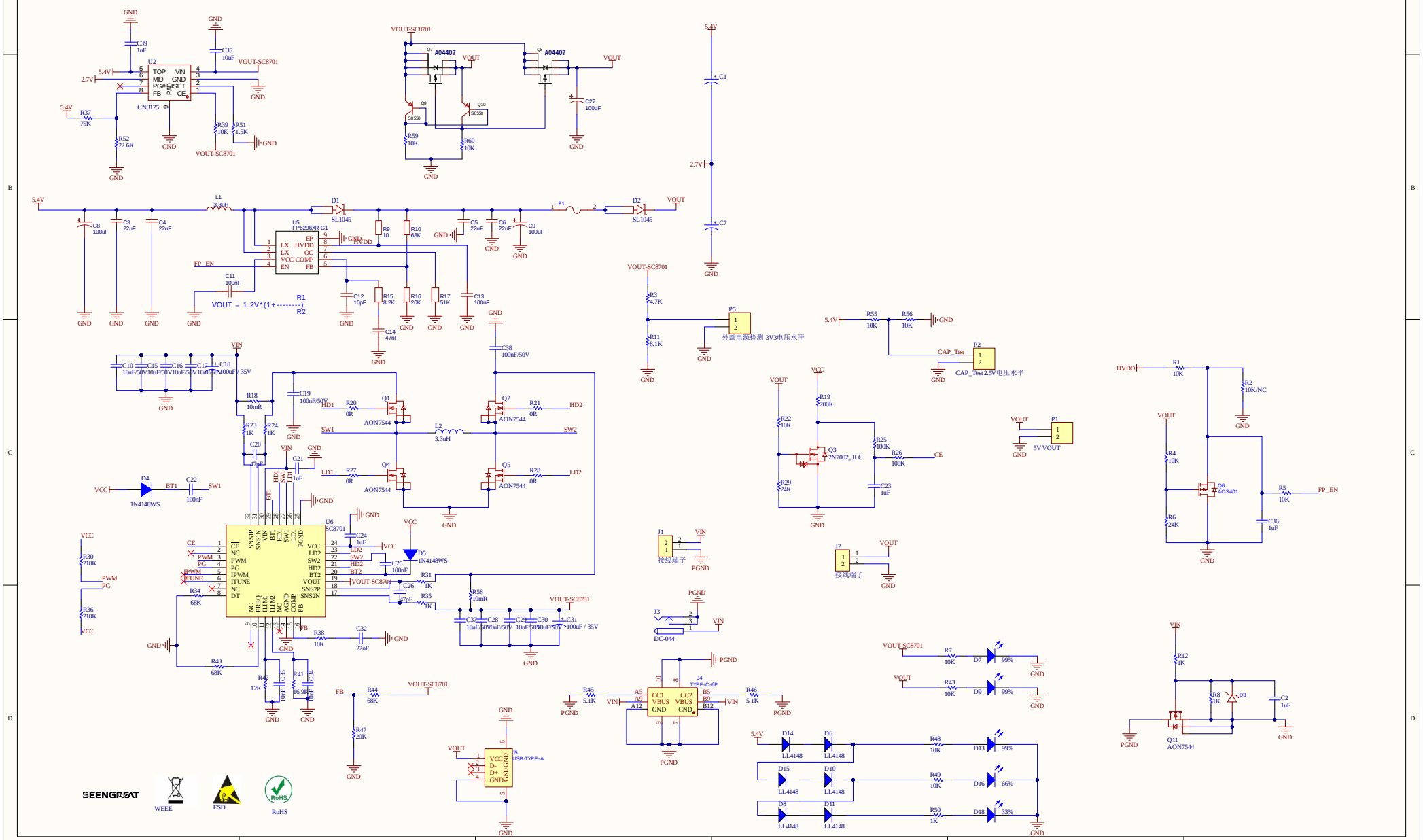
U2
CN3125
TOP
MID
PG#
FB
VIN
GND
SET
CE
C39 1uF
C35 10uF
VOUT-SC8701
5.4V
2.7V
R37 75K
R52 22.6K
R39 10K
R51 1.5K
Q7 A04407
Q8 A04407
Q9 S8550
Q10 S8550
R59 10K
R60 10K
C27 100uF
VOUT
C1
C7
L1 3.3uH
D1 SL1045
D2 SL1045
F1
C8 100uF
C3 22uF
C4 22uF
C5 22uF
C6 22uF
C9 100uF
U5 FP6296XR-G1
EP
LX HVDD
LX OC
VCC COMP
EN FB
HVDD
R9 10
R10 68K
FP_EN
C11 100nF
VOUT = 1.2V*(1+--------)
R1
R2
C12 10pF
R15 8.2K
R16 20K
R17 51K
C13 100nF
C14 47nF
C38 100nF/50V
R3 4.7K
R11 8.1K
P5
外部电源检测 3V3电压水平
R55 10K
R56 10K
CAP_Test
P2
CAP_Test 2.5V电压水平
C10 10uF/50V
C15 10uF/50V
C16 10uF/50V
C12 10uF/50V
C18 100uF / 35V
R18 10mR
C19 100nF/50V
R20 0R
R21 0R
Q1 AON7544
Q2 AON7544
HD1
HD2
SW1
SW2
L2 3.3uH
R23 1K
R24 1K
C20 47nF
C21 1uF
R27 0R
R28 0R
Q4 AON7544
Q5 AON7544
LD1
LD2
D4 1N4148WS
BT1
C22 100nF
U6 SC8701
CE
NC
PWM
PG
IPWM
ITUNE
NC
DT
SN5IP
SN5IN
VIN
BT1
HD1
SW1
LD1
PGND
VCC
LD2
SW2
HD2
BT2
VOUT
SN5P
SN5N
NC
FREQ
ILIM1
ILIM2
NC
AGND
COMP
FB
C24 1uF
C25 100nF
D5 1N4148WS
R31 1K
C26 47pF
R35 1K
R58 10mR
C37 10uF/50V
C28 10uF/50V
C29 10uF/50V
C30 10uF/50V
C31 100uF / 35V
R30 210K
R36 210K
R34 68K
R40 68K
R42 12K
R41 16.9K
C33 10uF
C34 10uF
R38 10K
C32 22nF
R44 68K
R47 20K
J1
接线端子
J2
接线端子
J3
DC-044
R22 10K
R19 200K
Q3 2N7002_JLC
R25 100K
R26 100K
R29 24K
C23 1uF
P1
5V VOUT
HVDD
R1 10K
R2 10K/NC
R4 10K
Q6 AO3401
R5 10K
FP_EN
R6 24K
C36 1uF
R45 5.1K
J4 TYPE-C-6P
CC1 VBUS GND
CC2 VBUS GND
A5 A9 A12
B5 B9 B12
R46 5.1K
J5 USB-TYPE-A
VCC D- D+ GND
R7 10K
D7 99%
R43 10K
D9 99%
D14 LL4148
D6 LL4148
D15 LL4148
D10 LL4148
D8 LL4148
D11 LL4148
R48 10K
D13 99%
R49 10K
D16 66%
R50 1K
D18 33%
R12 1K
R8 1K
D3
C2 1uF
Q11 AON7544
SEENGREAT
WEEE
ESD
RoHS